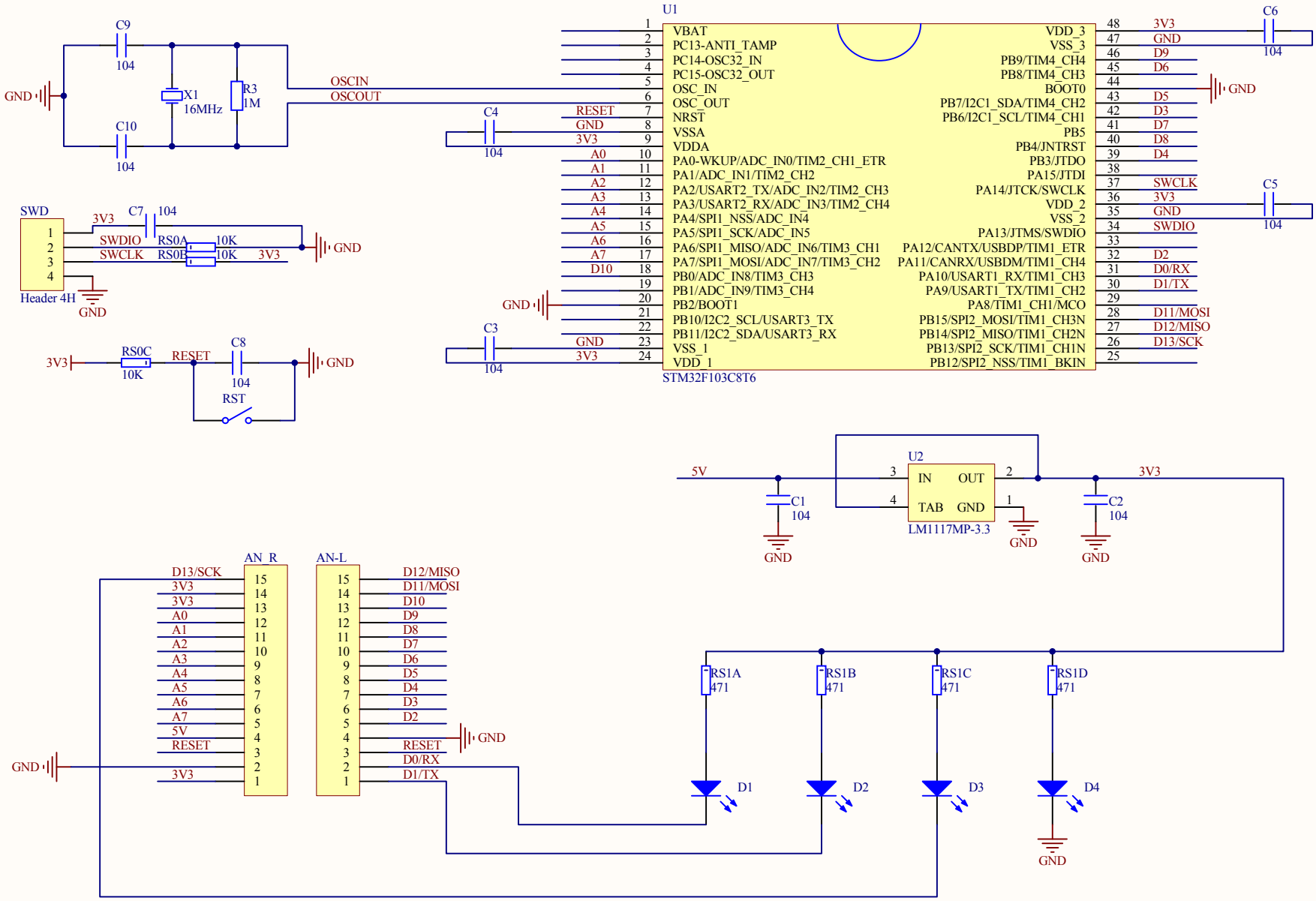
U1
STM32F103C8T6
VBAT
PC13-ANTI_TAMP
PC14-OSC32_IN
PC15-OSC32_OUT
OSC_IN
OSC_OUT
NRST
VSSA
VDDA
PA0-WKUP/ADC_IN0/TIM2_CH1_ETR
PA1/ADC_IN1/TIM2_CH2
PA2/USART2_TX/ADC_IN2/TIM2_CH3
PA3/USART2_RX/ADC_IN3/TIM2_CH4
PA4/SPI1_NSS/ADC_IN4
PA5/SPI1_SCK/ADC_IN5
PA6/SPI1_MISO/ADC_IN6/TIM3_CH1
PA7/SPI1_MOSI/ADC_IN7/TIM3_CH2
PB0/ADC_IN8/TIM3_CH3
PB1/ADC_IN9/TIM3_CH4
PB2/BOOT1
PB10/I2C2_SCL/USART3_TX
PB11/I2C2_SDA/USART3_RX
VSS_1
VDD_1
VDD_3
VSS_3
PB9/TIM4_CH4
PB8/TIM4_CH3
BOOT0
PB7/I2C1_SDA/TIM4_CH2
PB6/I2C1_SCL/TIM4_CH1
PB5
PB4/JNTRST
PB3/JTDO
PA15/JTDI
PA14/JTCK/SWCLK
VDD_2
VSS_2
PA13/JTMS/SWDIO
PA12/CANTX/USBDP/TIM1_ETR
PA11/CANRX/USBDM/TIM1_CH4
PA10/USART1_RX/TIM1_CH3
PA9/USART1_TX/TIM1_CH2
PA8/TIM1_CH1/MCO
PB15/SPI2_MOSI/TIM1_CH3N
PB14/SPI2_MISO/TIM1_CH2N
PB13/SPI2_SCK/TIM1_CH1N
PB12/SPI2_NSS/TIM1_BKIN
OSCIN
OSCOUT
RESET
GND
3V3
A0
A1
A2
A3
A4
A5
A6
A7
D10
D9
D6
D5
D3
D7
D8
D4
SWCLK
SWDIO
D2
D0/RX
D1/TX
D11/MOSI
D12/MISO
D13/SCK
C9
104
C10
104
X1
16MHz
R3
1M
C4
104
C3
104
C6
104
C5
104
SWD
Header 4H
C7
104
RS0A
RS0B
10K
RS0C
C8
RST
U2
LM1117MP-3.3
IN
OUT
TAB
5V
C1
104
C2
104
AN_R
AN-L
RS1A
RS1B
RS1C
RS1D
471
D1
D2
D3
D4